HELVAR INTELLIGENT LCM-478

INSTALLATION GUIDE

CHECK THE SYSTEM DIAGRAM **3**
EXAMPLE SYSTEM DIAGRAM **4**
FIX THE LCM INTO CEILING OR TO A WALL **5**
CONNECT 'POWER IN' (MAINS POWER) **6**
CONNECT DALI LUMINAIRES (PORTS 1 TO 10) **7**
CONNECT INPUT DEVICES (E.G. SENSORS AND BUTTON PANELS) **8**
CONNECT DALI IN AND DALI OUT **9**
CONNECTORS FOR THE LCM-478, WITH WIRING DETAILS **11**
CONNECTORS FOR PORTS 1 TO 10: DALI LUMINAIRES AND DALI DEVICES 11
CONNECTORS FOR PORTS DALI IN AND DALI OUT 12
CONNECTOR FOR PORT 'POWER IN' 13
CONNECTORS FOR PORTS S1 AND S2 14

For more information: www.helvar.com/lcm , or use this QR code

CHECK THE SYSTEM DIAGRAM

Install the LCMs according to the system diagram.

The system diagram refers to the LCM serial numbers. The serial number is on the label on each LCM-478.

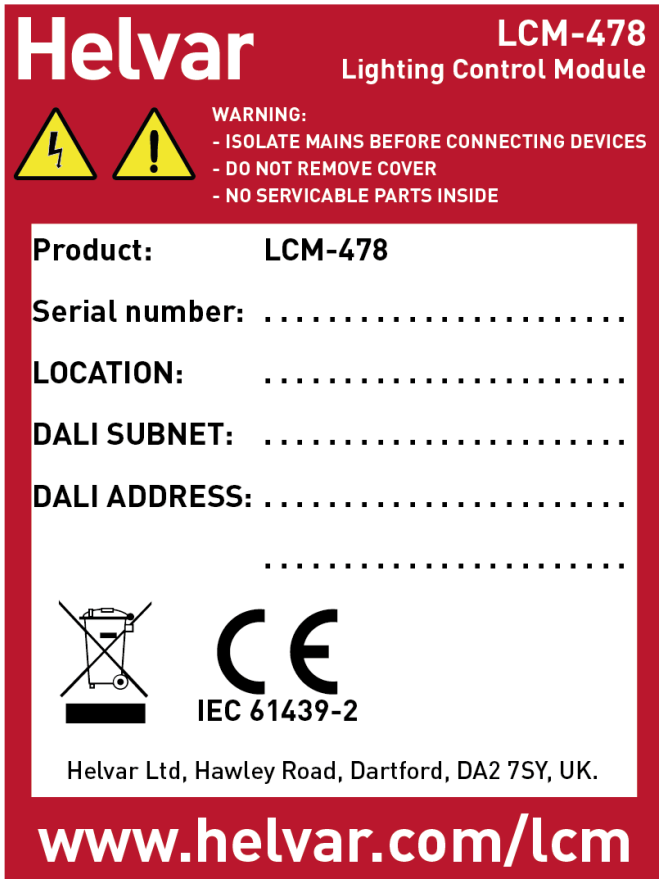

EXAMPLE SYSTEM DIAGRAM

This is an example of a system with five LCM-478s.

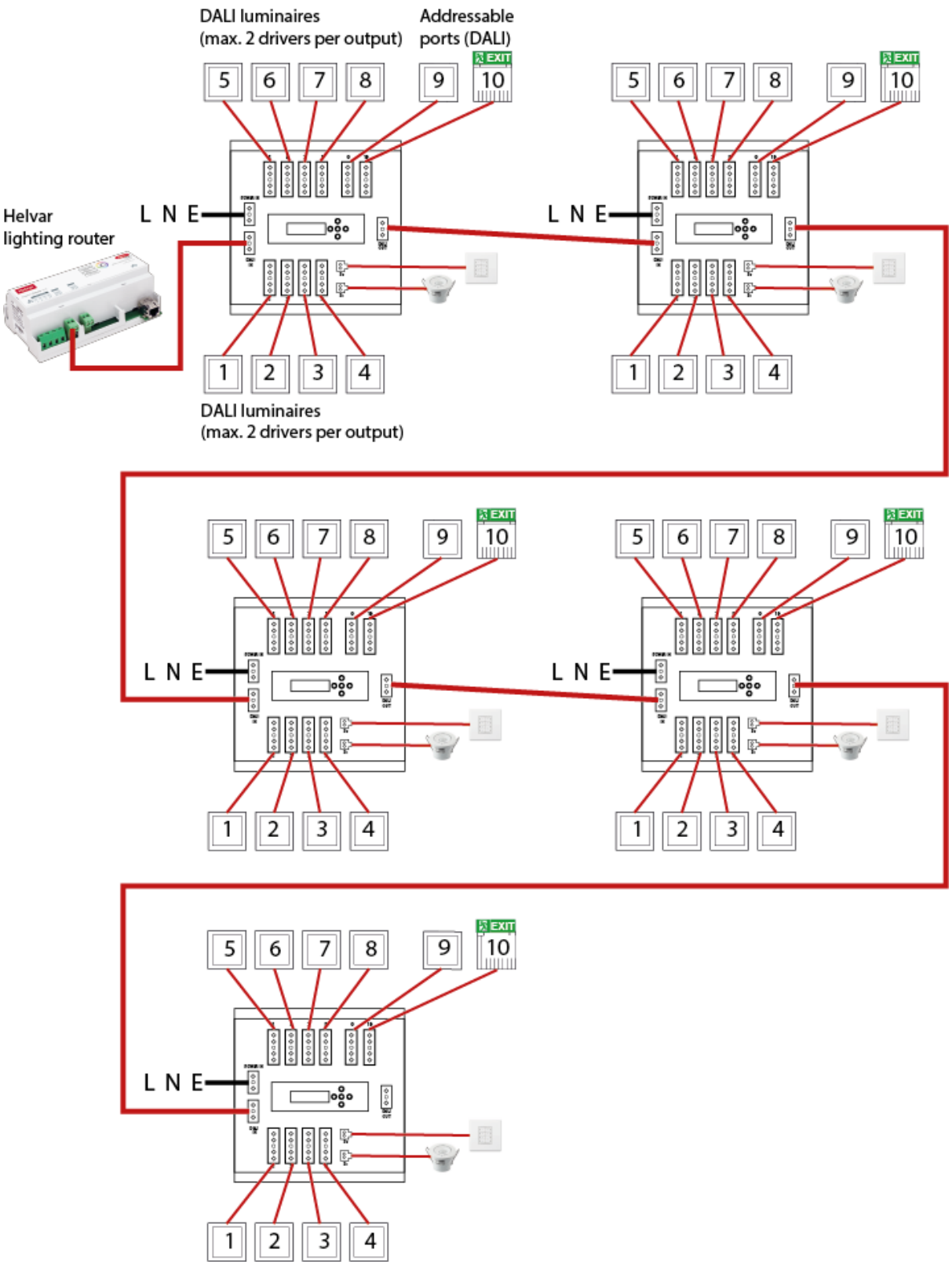

FIX THE LCM INTO CEILING OR TO A WALL

Mounting the Intelligent LCM can be installed on the ceiling or wall-mounted.

Attach the Intelligent LCM to a flat, smooth surface.

The installation must meet all relevant building regulations.

The device wiring must comply with the requirements of the most recent IEE wiring regulations (see BS7671).

Recommended mounting screws:

No. 8 (ø 4 mm) or No. 10 (ø 5 mm) screws with head diameter of 6 mm to 9 mm

Access and clearance

The installed Intelligent LCM and all connectors must be easy to access. Allow 300 mm clearance (clearance = total height of the Intelligent LCM and connectors and cables).

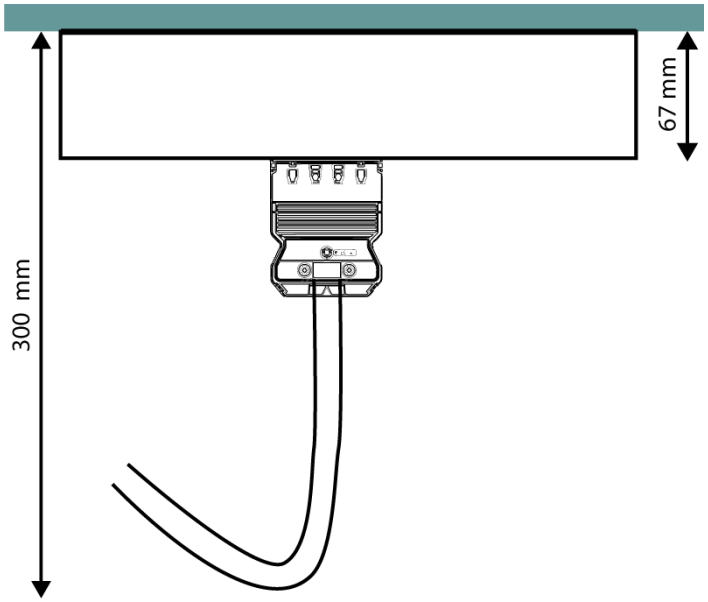

Important: install clear of obstructions

Attach the Intelligent LCM downwards and clear of obstructions, such as ventilation shafts and wiring ducts. The Intelligent LCM and connectors should be visible and accessible to ensure easy connection and maintenance.

CONNECT ‘POWER IN’ (MAINS POWER)

Connect mains power to the LCM-478. The LCD display will power on and show some text.

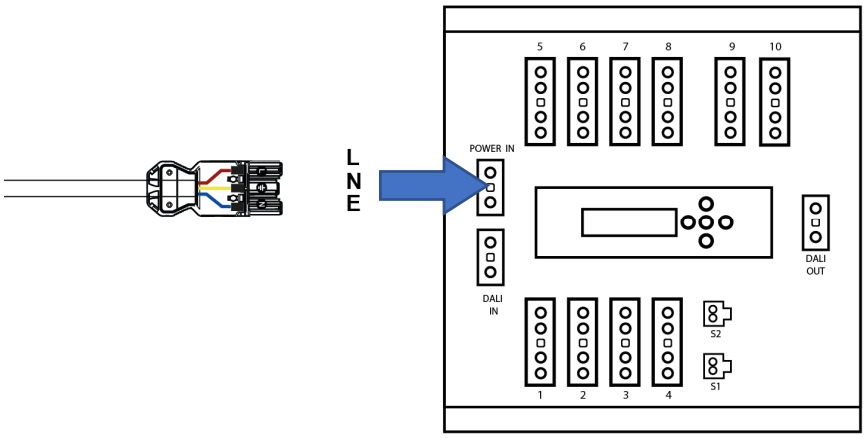

CONNECT DALI LUMINAIRES (PORTS 1 TO 10)

Connect the DALI luminaires to ports 1 to 8 and 9 and 10.

Label the connectors with the stickers provided: if a connector is removed this makes it simple to reconnect it to the correct port.

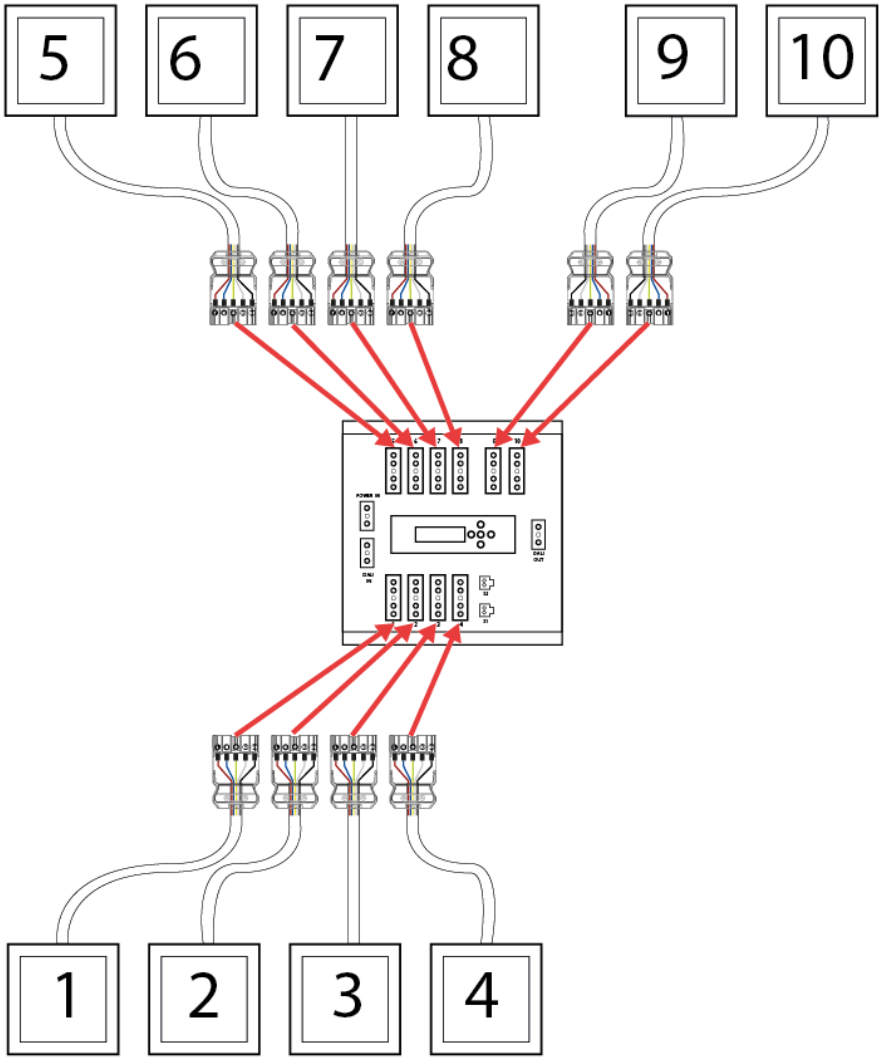

CONNECT INPUT DEVICES (e.g. SENSORS and BUTTON PANELS)

Connect the input devices (e.g. Helvar Sensor 321, or Helvar button panel 135) to ports S1 and S2.

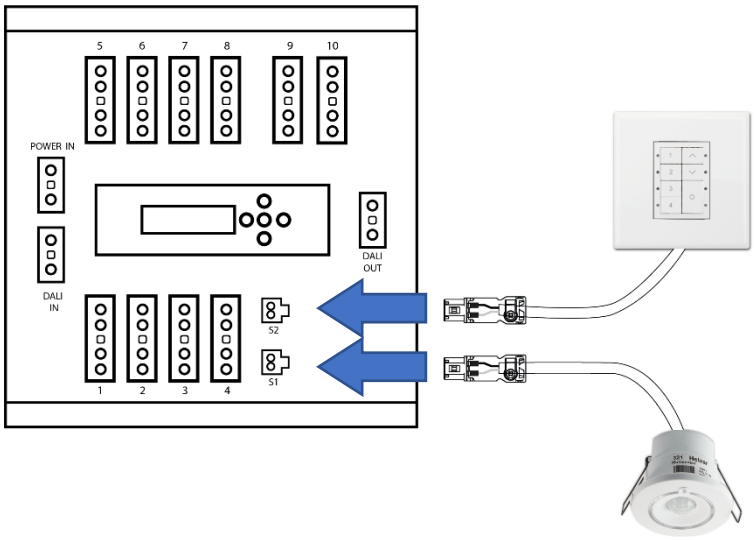

CONNECT DALI IN and DALI OUT

Connect the DALI line according to the system diagram.

- Connect the DALI cable from the DALI subnet terminal of Helvar lighting router to 'DALI IN' on the first LCM-478 in the DALI subnet.
- Connect DALI OUT of the first LCM-478 to DALI IN of the next LCM-478 in the DALI subnet, and so on. No 'DALI OUT' connection is required from the last LCM-478 in a DALI subnet.

Note: DALI is open topology , so a star or redial configuration can be used if required .
The maximum devices per subnet should not exceed the 64 devices or 250 mA.
Refer to individual device datasheets or contact Helvar technical support for advice

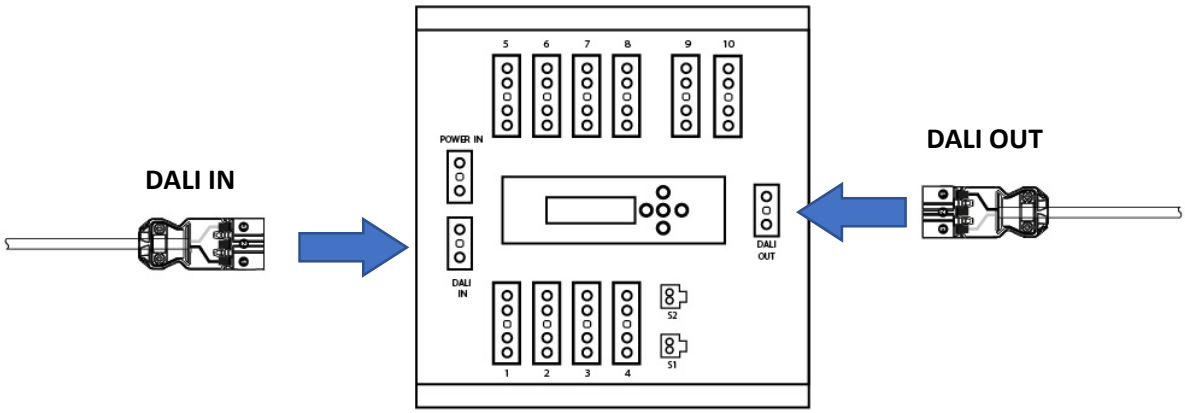

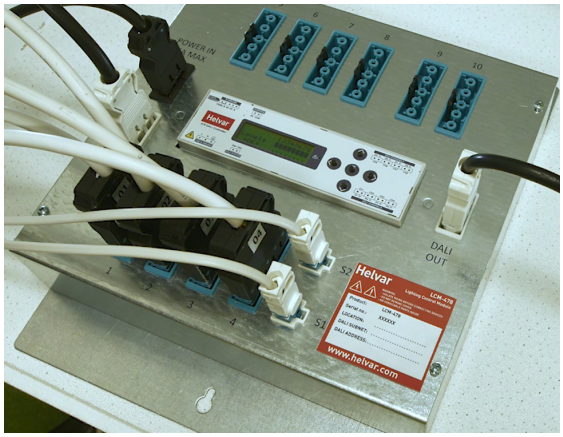

DALI TEST (for output ports 1 to 8)

- With mains power connected to the LCM-478, and the DALI luminaires connected, test the system by dimming the lights down then up again.
  To do this
  1. Press and hold the 'Down' button. The DALI luminaires should dim down.
  2. Press and hold the 'Up' button. The DALI luminaires should dim up.

To test the luminaires for ports 9 and 10, plug these luminaires into any of the ports 1 to 8 and confirm dimming operation as above.

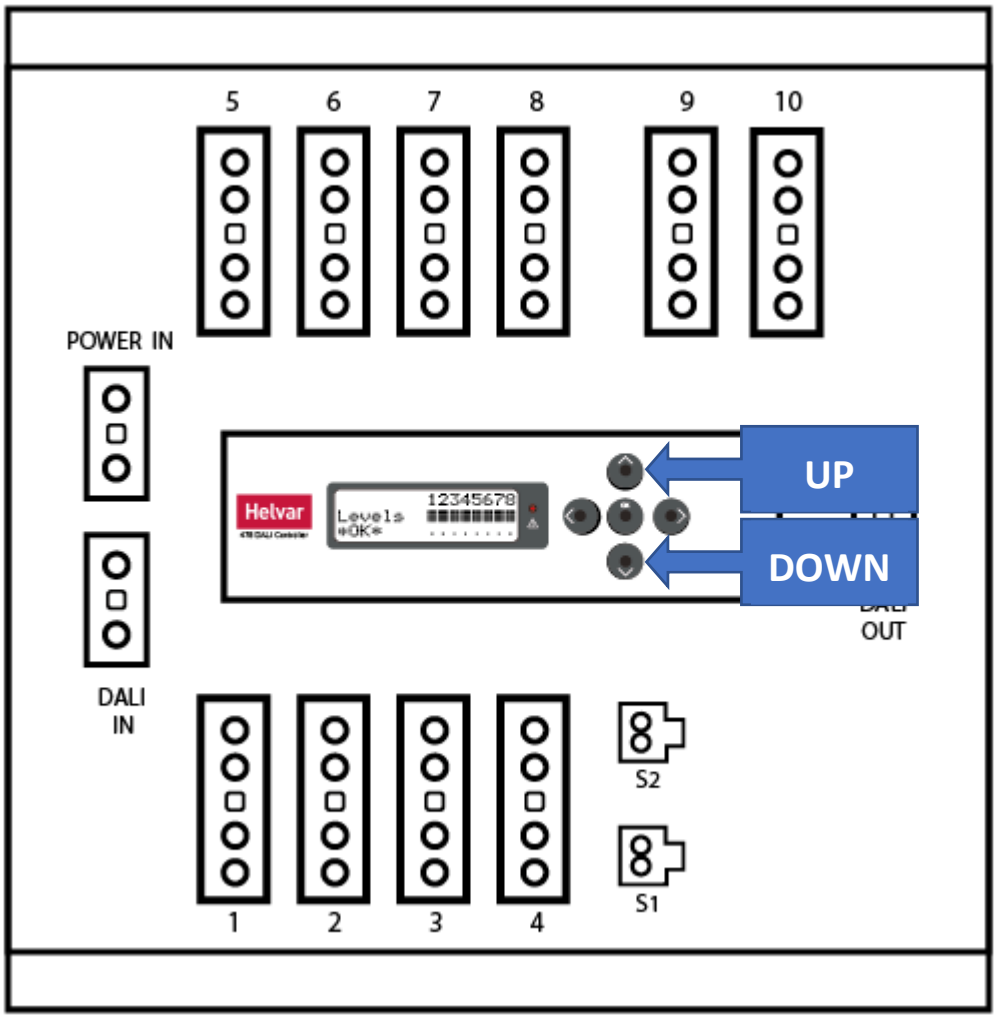

CONNECTORS FOR THE LCM-478, with wiring details

This section shows which connectors are recommended for connection to the LCM-478, and wiring details for those connectors.

The Wieland part numbers given include colour codes. Consult your connector supplier for alternatives to these recommendations.

Connectors for ports 1 to 10: DALI luminaires and DALI devices

Wieland male connector GST18i5 S1 ZR1 S PB02, 5 pole, male, flat version, screw connection, 250/400 V, 20 A, colour of coding: pastel blue, colour of housing: black

Wieland part number: 92.954.4453.0

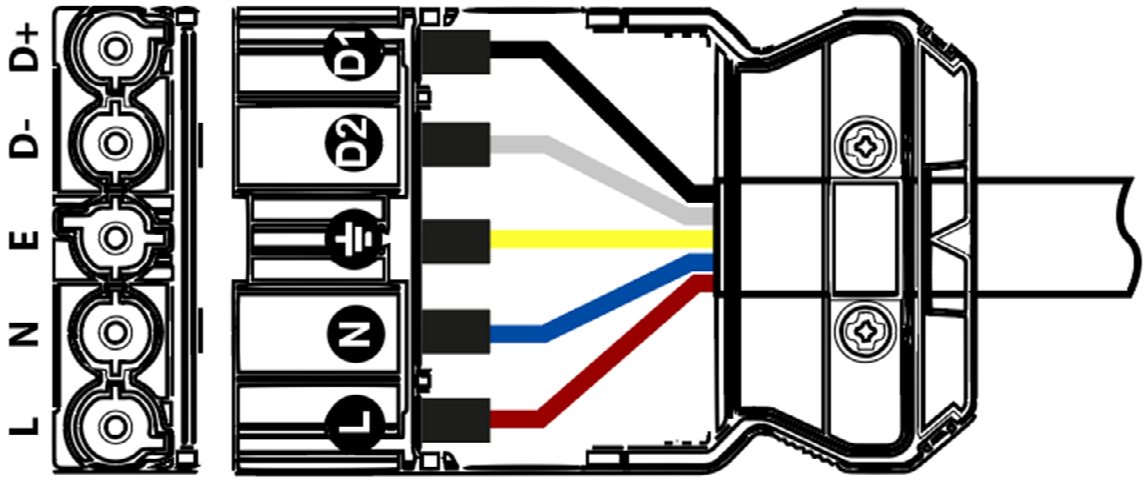

Connectors for ports DALI IN and DALI OUT

Wieland male connector with strain relief GST18I3S S1 ZR1 TB06, 3-pole, male, screw connection, 250 V, 20 A, colour of coding: turquoise blue, colour of housing: black

Wieland part number: 92.932.4053.0

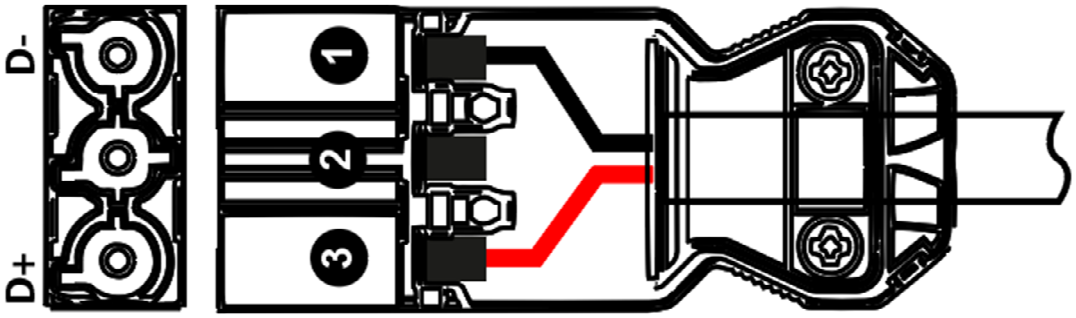

Connector for port ‘POWER IN’

Wieland female connector with strain relief GST18I3S B1 ZR1 SW, 3-pole, female with screw connection, coding mains 250 V, 20 A, coding colour black, strain relief color black

Wieland part number: 92.931.3053.1

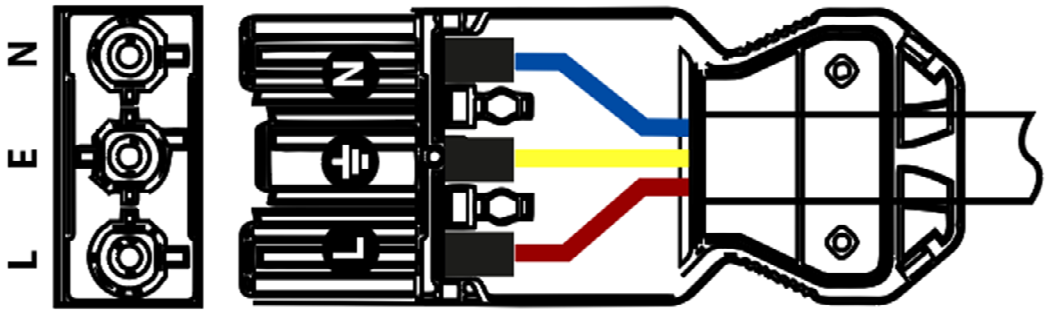

Connectors for ports S1 and S2

Wieland male connector with strain relief GST15I2S S1 ZR1WW PB01, 2-pole, male, screw connection, 250V/6A, color of coding: pastel blue, color of housing: white
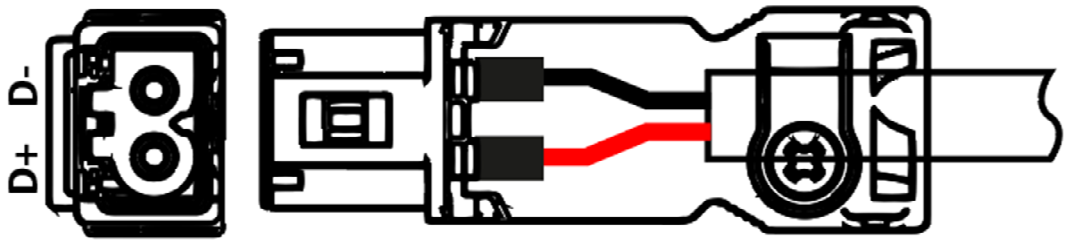
Wieland part number: 91.922.3453.0